Datasheet

Smart IoT Box

WI-IOTBOXNANO

Overview

Wi-Tek's Smart IoT Box is an all-weather outdoor electrical equipment protection box designed for outdoor use in the outdoor environment. It has waterproof, dustproof, heat dissipation, anti-ultraviolet, anti-theft, anti-rust, acid and alkali corrosion, anti-electromagnetic interference (anti-lightning EMP), modular structure design in the box, electrical equipment can be installed vertically or horizontally according to the situation.

Fit outdoor CCTV, WLAN, Wi-Fi Coverage, Industrial IoT Application requirements with Wi-Tek industrial switch, 4G LTE router, outdoor wireless transmitter, solar powered PoE switch, IoT M2M gateway, and mesh AP, greatly decrease your project deployment cost by flexible modular installation.

Features

IP55 Ingress Protection

Outstanding dustproof and waterproof design protects the equipment inside the box in the outdoor.

Rugged construction

A seamless welding box body can withstand huge external forces without deformation.

Advanced Outdoor Protection

Made of aluminum alloy or 304 stainless steel connecting mounting parts, Electrostatic powder spraying main body, can anti-aging, gas corrosion resistance, UV damage resistance, acid and alkali corrosion resistance, salt spray moisture resistance.

Modular Installation

The modular structure design, side panel, DIN-rail, mounting plate, waterproof connector, fan, and microswitch are all detachable.

Heat Dissipation

The fan on the right side and the ventilation vents on the left side form a left-right cross-ventilation air duct to assist in equipment heat dissipation.

Microswitch for Flexible Application

The door microswitch can be connected to the power supply, to the cloud alarm via I/O, or to the buzzer alarm(Coming soon).

Specifications

Products	WI-IOTBOXNANO
Hardware Version	V1
Hardware Features	
Overall Dimensions (W*H*D)	300*400*148mm (Include mounting slot) 300*400*133mm
Inner Dimensions (W*H*D)	296*396*95mm
Weight(kg)	6.2kg
Package Dimensions (W*H*D)	460*360*195mm
Package Weight(kg)	7kg
Thickness	1.2mm
Materia	SPCC
Color	Light Grey + Grey
Surface Treatment	Electrostatic Spraying
Installation	Pole/Wall(optional)/Floor mounted
Door	1
Lock Hole	1
Detachable Side Plate	2 (1 on each side panel)
M25 Waterproof Connector	2 (1 on each side inner panel)
Aluminum Alloy Chute	2 (on the rear panel)
Bottom Cable Entry	1 (at the bottom)
Water Outlet Holes	4 (at the bottom, can be blocked with rubber plugs)
Microswitch	1 (on the upper right inside)
Fan	1 (on the right inner panel)
Insect Net	2 (1 on the upper right inside , between the fan and the waterproof louver, 1 on the upper left inside, between the back bracket and the waterproof louver)
Equipment Installation	2*250mm DIN-Rail
Protection	IP55
Application	
Application	Junction, Distribution, Electrical, Battery, Control, Monitoring etc. Outdoor waterproof Enclosure Box

Accessory Specifications

Products	
Fan	
Brand	Delta
Model	AFB0612EH
Input Voltage	12V DC
Bearing	Ball
Termination	2 wire leads
Input Current	0.48A
Power consumption	4.56W
Speed	6800 RPM
Air Flow	38.35 CFM (1.068m^3/min)
Acoustical Noise	46.5 dB
Dimensions	60*60*25mm
Operation temperature	–10℃ ~70℃
Microswitch	
Brand	Omron
Model	V156–1C25
PIN	NC, NO, COM; NC and COM have connected cables.
Rated Current	15A
Rated Voltage	250V
Mechanical Life	15,000,000 cycles

Appearances and Dimensions

WI-IOTBOXNANO

Front Overview

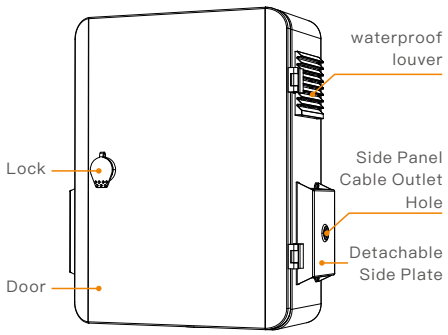

Rear Overview

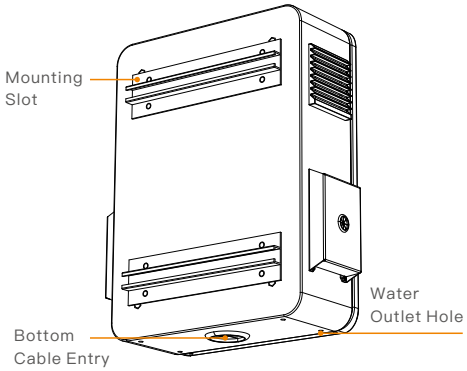

Inner Overview

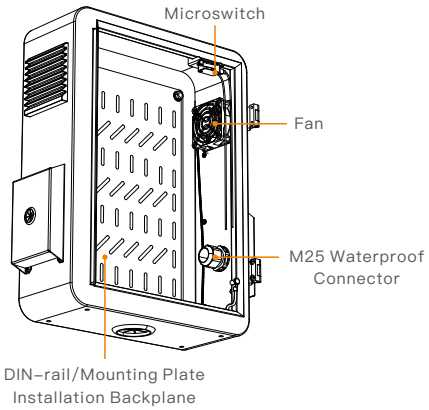

Front

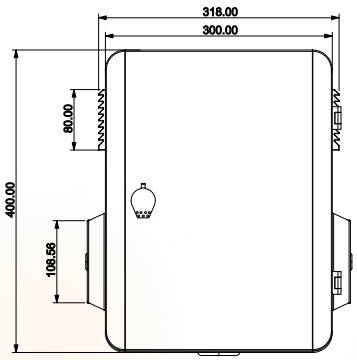

Inner Front

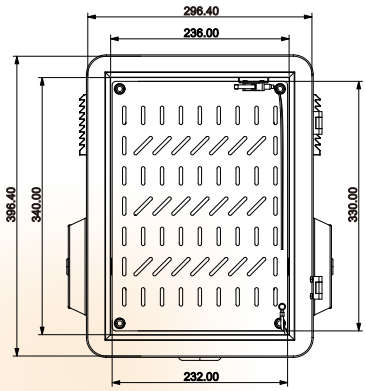

Left Side

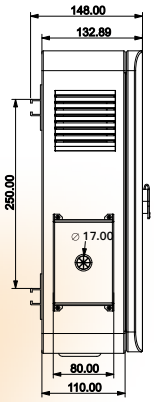

Inner left

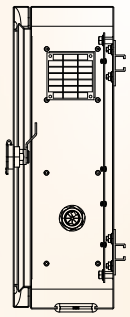

Inner right

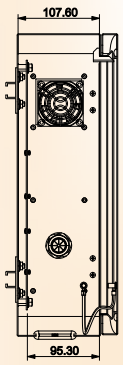

Bottom

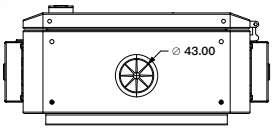

Package Content

Welcome to order our products. After purchasing, you will receive:

WI-IOTBOXNANO

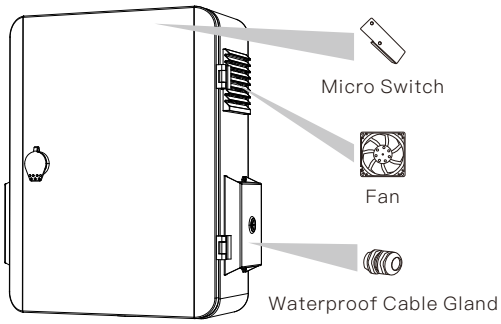

1*BOX (With 1*Fan, 1*Micro Switch, 2*M25 waterproof connector)

Wall Mounting Accessories (Optional)

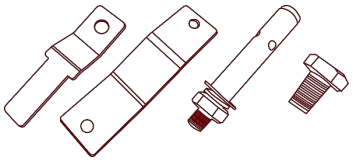

2*Hanging Pieces (Small), 2*Hanging Pieces (Large), 4*Expansion screws, 4*Hex screws

Pole Mounting Accessories

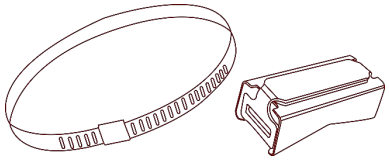

2*1.1m Stainless Steel Cable Ties (50–300mm in diameter), 2*Stainless Steel Universal Clips

1*Quick Installation Guide

2*Key

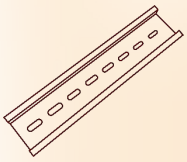

2*DIN Rail (Length: 250mm)

Wireless-Tek Technology Limited
Address:Building 3, Units 1801-1807, 1812, Huaqiang Era Plaza, Tangwei Community, Fuhai Street, Bao'an District, Shenzhen City, Guangdong Province, China.
Website:www.wireless-tek.com
Tel:86-0755-32811290
Email:sales@wireless-tek.com
Technical Support:tech@wireless-tek.com

Technical Support
Cloud Management
Company Website

©2026 Wireless-tek Technology Limited. All Rights Reserved.
Version,V1.0, updated 2026.09.20.
The information in this document is subject to change without notice.
Every effort has been made in the preparation of this document to ensure accuracy of the contents, but all statements, information, and recommendations in this document do not constitute a warranty of any kind, express or implied.