Datasheet

5G Sub-6GHz & mm Wave Outdoor CPE

WI-NR5100

Overview

The WI-NR5100 is a 5G Sub-6GHz & mmWave + LTE Outdoor CPE designed for outdoor deployment. Easy to install and high-performance, it is equipped with a dedicated 10-Gigabit Ethernet port and 5G/LTE connectivity to deliver maximum redundancy and flexibility, making it ideal for demanding internet applications in remote areas. With its rugged design, flexible deployment options and user-friendly operation, the WI-NR5100 is perfectly suited for both large-scale and individual deployments.

Features

Dual-Mode 5G(Sub-6GHz + mmWave) & LTE Cat.20

WI-NR5100 supports 5G SA/NSA (Sub-6GHz bands: n1/n78, etc.) + mmWave (n257/n258/n260/n261) for ultra-high speeds (up to 10Gbps DL), and is backward-compatible with LTE Cat.20 (2.0Gbps DL) and WCDMA for seamless fallback.

Qualcomm Snapdragon X75 Modem & Advanced Antennas

WI-NR5100 features 4×4 MIMO (Sub-6GHz) and 2×2 MIMO (mmWave) with Dynamic Antenna Steering for optimal signal strength. It supports optional QTM567 mmWave modules (up to 51.6dBm EIRP) for extended range and beamforming.

Rugged Outdoor Design with IP65 & Extreme Durability

WI-NR5100 comes with an IP65-rated enclosure, 6kV lightning protection, and a wide temperature range (-30°C to 75°C). It also supports flexible mounting (wall/pole) with ±50° tilt adjustment for precise alignment.

High-Speed Connectivity & Interfaces

The WI-NR5100 features a 10Gbps Ethernet port with PoE++ support for simplified cabling. It also includes a USB 3.1 Type-C port and micro-SIM slot for enhanced flexibility.

Comprehensive Management & Security

The WI-NR5100 supports remote management via HTTPS, TR-069, and OTA firmware upgrades.It features SIM locking, PLMN locking, and IPv4/IPv6 support for secure and flexible network configurations.

Specifications

Model	WI-NR5100
Hardware Version	V1
Hardware Specifications	
Chipset	Qualcomm SDX75 LGA
Memory	1GB LPDDR4x
Flash	4GB NAND
Device Interfaces	1 x 10G bps GE Ethernet port 6 x LED indicator PWR, LAN, 5G, Signal Strength LEDs*3 1 x Sim Slot 1 x Reset button 1 x USB-C Port (USB3.1 Gen2 Super-speed)
Power Supply	802.3bt PoE IN
5G/LTE Features	
Standards	IEEE 802.3u Fast Ethernet IEEE 802.3ab Gigabit Ethernet IEEE 802.3bz 2.5Gigabit Ethernet IEEE 802.3bz 5Gigabit Ethernet IEEE 802.3ae 10Gigabit Ethernet IEEE 802.3bt 73.1W POE
Modulation	LTE DL: 256QAM, UL: 256QAM SA DL: 1024QAM, UL: 256QAM NSA LTE DL: 256QAM, UL: 256QAM NSA NR DL: 1024QAM, UL: 256QAM
Antennas	8 x internal Sub-6G antennas (The 3~7dBi Internal directionl antenna for Sub 6G-Hz) 4 x internal mm Wave antennas array (For enhancement on 5G NR and mm Wave 14.5dBi/ 17.5dBi/ 20.5dBi mm Wave antenna)
5G / LTE Frequency	**FG190W-EAU:** WCDMA: DL 2 x 2 MIMO B1/5/8 LTE: DL 4 x 4 MIMO FDD: B1/3/5/7/8/20/28/32 TDD: B38/40/41/42/43 **5G NR SA :** DL 4 x 4 MIMO: n1/3/5/7/8/20/26/28/38/40/41/75/76/77/78 UL 2 x 2 MIMO: n1/3/5/7/8/28/38/40/41/77/78 **5G NR NSA :** DL 4 x 4 MIMO LTE: B1/3/5/7/8/20/28/32/38/40/41/42/43 DL 4 x 4 MIMO NR: n1/3/5/7/8/20/26/28/38/40/41/75/76/77/78 5G NR mmWave: n257/258/260/261

Model	WI-NR5100
5G / LTE Throughput	5G SA Sub-6: 6.18Gbps (DL) / 900Mbps (UL) 5G SA +mmW: 10Gbps (DL) / 3.38Gbps (UL) 5G NSA Sub-6: 4.92Gbps (DL) / 555Mbps (UL) 5G NSA +mmW: 8.8Gbps (DL) / 2.6Gbps (UL) LTE: 2Gbps (DL) / 211Mbps (UL) WCDMA: 42Mbps (DL) / 5.76Mbps (UL)
MIMO	Sub-6 bands: 4 x 4 MIMO downlink, 2 x 2 MIMO uplink MmWave: 2 x 2 MIMO downlink and uplink
Output Power	FG190W-EAU: 24dBm±0.5dBm 1*mm Wave: 41dBm±0.5dBm
Software Features	
WWAN Profile Setting	APN: [Auto / Manual] Password NAT Mode Authentication: [NONE/PAP/CHAP/PAP+CHAP] IP Version: [IPv4/ IPv6/ IPv4v6] USSD Band Lock
Device Information	**Device Information** -Model Name, Router F/W version, Modem version, CPU info, System up time, Memory info **Router Status/Modem Status** - WWAN IP Address, Subnet Mask, Default Gateway, DNS IP Address - Operator name, Network name, Signal strength, Link Status **Client status**
Management Function	Administrator Password and Timeout Configuration Backup/ Restore Reboot/Reset to Default System log Statistics Diagnostics(Ping, Traceroute, tcpdump, speedtest) System Tools (TR069, stun, snmp) NTP time setting Firewall setting Port Forwarding Dynamic DNS
Upgrade Method	Web-base GUI FOTA Tr069

Model	WI-NR5100
Physical	
Dimensions	256(H) x 196(W) x 62(D)mm
Weight	<1.5Kg
IP Rating	IP 65
Power Protection	± 6kV
Mounting Methods	Mounting on wall Mounting to a pole
Power Consumption	< 70W
Temperature	Operating: -30 to 75 ˚C Storage: -40 to 85 ˚C
Regulation Compliance	CE/FCC
Safety Regulations	UL
Green Standard	RoHS

WI-NR5100

Dimensions (mm)

Interfaces Diagram

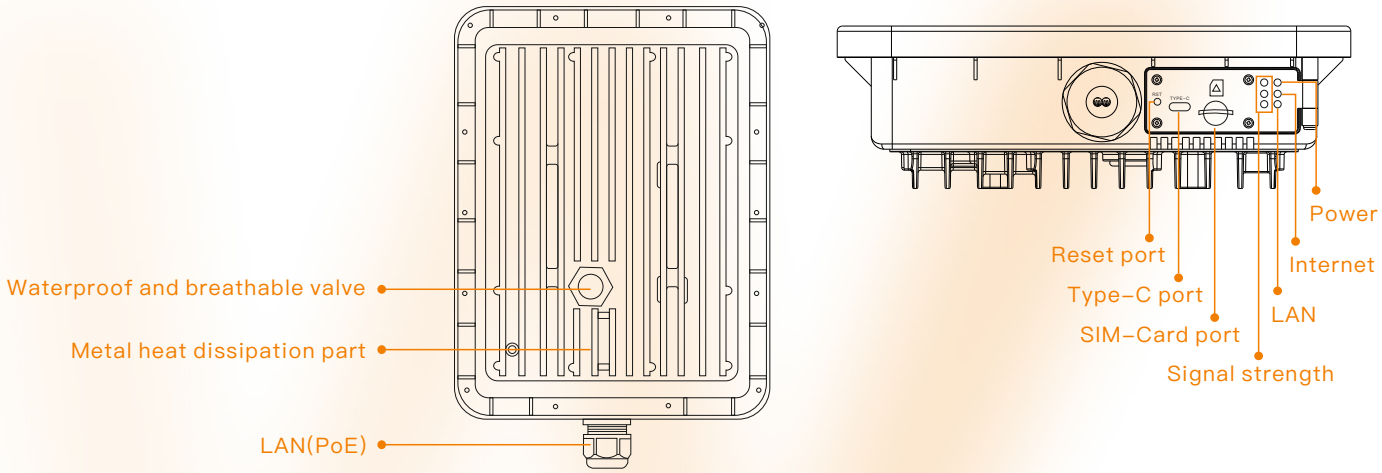

Wireless-Tek Technology Limited
Address:Building 3, Units 1801-1807, 1812, Huaqiang Era Plaza, Tangwei Community, Fuhai Street, Bao'an District, Shenzhen City, Guangdong Province, China.
Website:www.wireless-tek.com
Tel:86-0755-32811290
Email:sales@wireless-tek.com
Technical Support:tech@wireless-tek.com

Technical Support
Cloud Management
Company Website

©2026 Wireless-tek Technology Limited. All Rights Reserved.
Version,V1.0, updated 2026.05.27.
The information in this document is subject to change without notice.
Every effort has been made in the preparation of this document to ensure accuracy of the contents, but all statements, information, and recommendations in this document do not constitute a warranty of any kind, express or implied.